外形寸法図 Packaging Information / 参考パターン寸法図 Reference Pattern Layout Dimensions

CL-2025-02

■外形寸法図 / Packaging Information

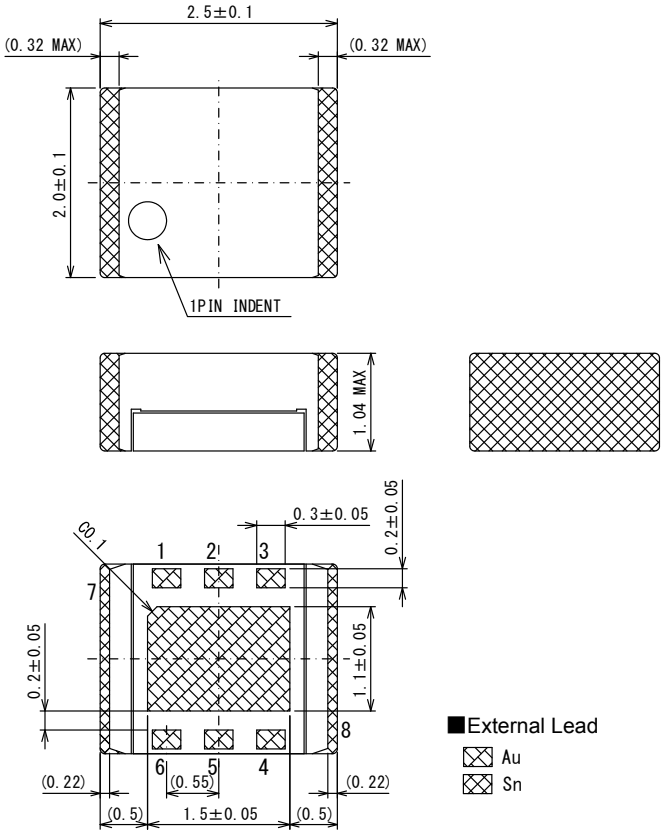

■参考パターンレイアウト

Reference Pattern Layout

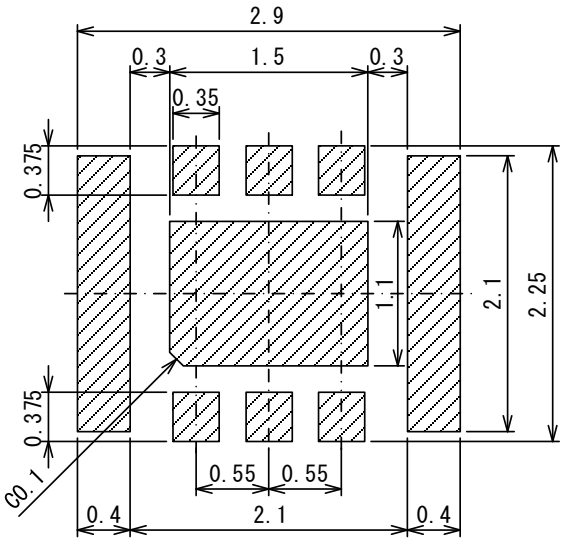

■参考メタルマスクデザイン

Reference Metal Mask Design

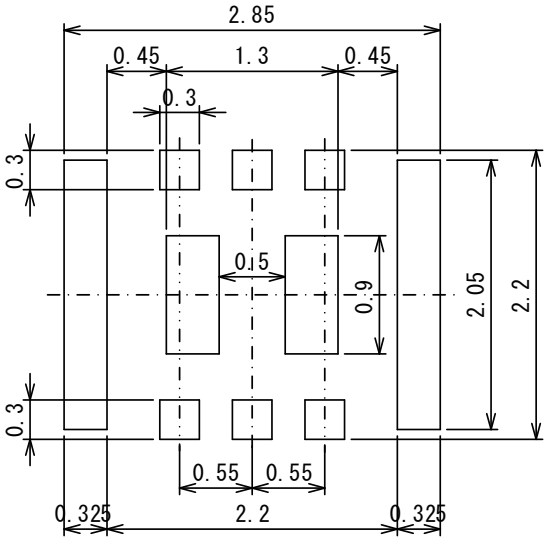

・Solder thickness:120μm (Ref.)

*It is recommended to mount the CL 2025-02 with an accuracy of 0.05mm or less.

*Please mount based on the position of coil terminal.